Assembly and Commissioning Instructions
BDC Eco

according to Machinery Directive 2006 / 42 / EC (annex VI)

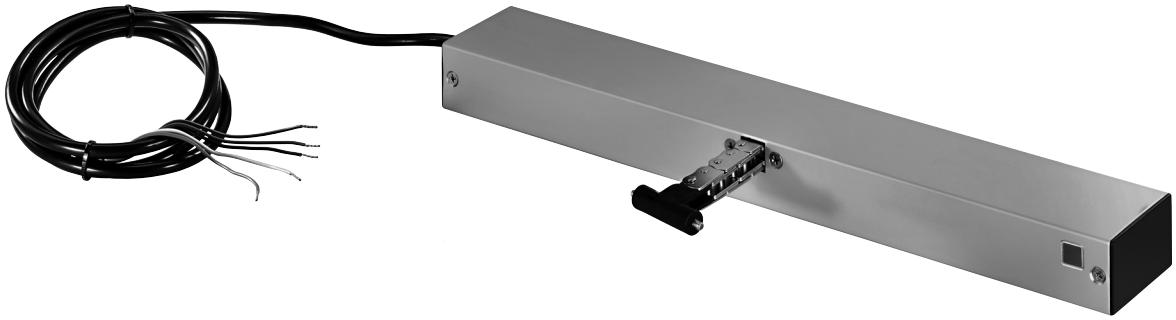

BDC Eco (24 V DC / 230 V AC) - Chain Drive for windows CE

Contents

01	Abbreviations Target Groups Warning and Safety Symbols Intended Use Safety Instructions	3 - 8
02	Data sheet BDC Eco 230V AC Data sheet BDC Eco 24V DC Application areas and casement sizes Explanations on the product label	9 - 11
03	Installation step 1: Inspection before the installation Installation step 2: Installation prerequisite and Installation preparation	12 - 13
04	Installation step 3: Frame bracket and casement brackets (Dimensions and Drill holes) Application examples Installation step 4: Hole layout for frame brackets and casement bracket	14 - 16
05	Installation step 5a: Bottom-hung inward opening windows - swiveling drive mounting Installation step 5b Top-hung outward opening windows - swiveling drive mounting	17 - 18
06	Installation step 6: Cable routing Installation step 7: Electric connection	19 - 20
07	Installation step 8: Automatic setting of the end position Installation step 9: Supply lines of the Control Unit to the drives Installation step 10: Safety check and test run Help in case of malfunctions, repairs and maintenance Maintenance and modification	21 - 23
08	Demounting and disposal Liability Warranty and customer service	24 - 25

Abbreviations

Index of abbreviations	
These abbreviations are used consistently throughout these assembly & operating instructions. Unless stated differently, all dimensions indicated in this document are in mm. General tolerances in accordance with DIN ISO 2768-m.	
A	drive
AK	connection cable / drive cable
AP	cover cap
BD	hinge
BDBxxx	casement bracket / frame bracket
FAB	overall width of casement
FAH	overall height of casement
FG	casement weight
FL	casement
FÜ	casement overlap
HSK	main closing edge
L	construction lenghth of drive
MB	central hinge
NSK	side closing edge
RA	frame
RAB	overall width of frame
RAH	overall height of frame
SL	snow load
SW	wrench size
→	opening direction

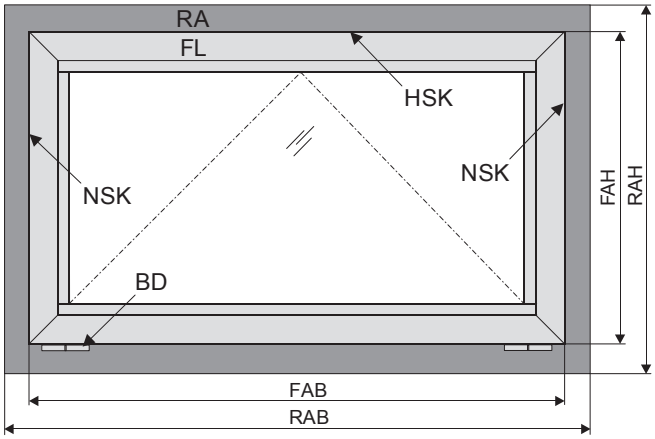

Target group

These instructions are intended for trained personnel and operators of systems for natural smoke ventilation (SHEVS) (smoke and heat exhaust ventilation system) and natural ventilation via windows, who are knowledgeable of operating modes as well as the remaining risks of the system.

Warning and safety symbols in these Instructions:

The symbols used in the instructions shall be strictly observed and have the following meaning:

⚠ Danger Failure to comply with the warning notes results in irreversible injuries or death.

⚠ Warning Failure to comply with the warning notes can result in irreversible injuries or death.

⚠ Caution Failure to comply with the warning notes can result in minor or moderate (reversible) injuries.

Note Failure to comply with the warning notes can lead to damage to property.

Caution / Warning
Danger due to electric current.

Caution / Warning
Risk of crushing and entrapment during device operation (is provided as a sticker with the drive).

Attention / Warning
Risk of damage to / destruction of drives and / or windows.

⚠ Warning Once the assembly and commissioning has been completed, the installer of a machine „power-operated window" shall hand these instructions over to the end-user.
The end-user shall store these instructions in a safe place over the whole lifecycle and use it for further reference, if required.

⚠ Warning This device is not intended for use by persons (including children) with physical, sensory or mental limitations or lacking experience and / or knowledge, unless they are supervised by a person who is responsible for the safety or were instructed on the usage of this equipment. Children should be supervised to ensure that they are not playing with this device.
Cleaning and operator's maintenance may not be performed by children without supervision.

01

Intended use

Area of application / Scope of application

This drive is intended for the electromotive opening and closing of windows in facade or roof areas.

The main task of this product, in combination with a window and a suitable external control unit, **is to evacuate hot smoke and combustion gases in case of fire**, to safe human lives and protect material assets. Furthermore, with the electromotive operated window and a suitable external control unit, **the natural ventilation** of the building can be ensured.

Note

By attaching the drive to a movable element of the window and connecting it to a power supply a so-called "power-operated window" is created which, according to the Machinery Directive 2006 / 42 / EG, represents a machine.

Intended use

The drive is intended for stationary installation and electrical connection at the window as part of a building.

The drive is in combination with an external Control Unit (e.g. from **BTR**) released for its proper use at a power-operated window for the following use:

- Application for natural ventilation
  - with an installation height of the drive and the bottom side of casement of at least 2,5 m above the floor, **or**
  - with an opening width at the HSK of the driven part of < 200 mm by a simultaneous speed of < 15 mm/s at the HSK in closing direction.
- Application as NSHEV (natural smoke and heat exhaust ventilator(s) in accordance with EN12101-2 without dual purpose for ventilation.

⚠ Warning

Pay attention to possible hazards on tilting or rotating windows, whose side closing edges (NSK) are located at less than 2,5 m installation height above the floor, under consideration of the Control Unit and usage!

We as manufacturers are well aware of our duties and responsibilities regarding the development, manufacturing and placing of safe window drives on the market and consistently implement them. Ultimately, however, we have no direct influence on the usage of our drives. Therefore, as a precaution, we point out the following:

- The **constructor or his agent** (architect, specialist planner) **are obligated to evaluate the hazards to persons**, outgoing from the usage, installation position, opening parameters and from the external Control Unit of the power operated window, already **in the planning phase and to establish necessary protective measures**.
- The **constructor / manufacturer** of the machine "power-operated window" **must implement** the planned **protective measures** at the installation site or, if not yet established, **determine them** by it´s own responsibility and detect or **minimize possible remaining risks**.

The need for a risk assessment at the installation site due to the reasonably foreseeable misuse.

A risk assessment in accordance with the Machinery Directive 2006 / 42 / EG for the usage of the power-operated window **for natural ventilation is absolutely necessary** under the following conditions:

- the installation height of the drive and lower edge of casement < 2,5 m above the floor
  and one of the following conditions:
- the opening width at the HSK is > 200 mm, **or**
- the closing speed at the HSK is > 15 mm/s, **or**
- the opening speed at the HSK is > 50 mm/s, **or**
- the closing force at the HSK is > 150 N

The following flow chart can be applied, which also includes the protective measures in accordance with EN 60335-2-103/2016-05.

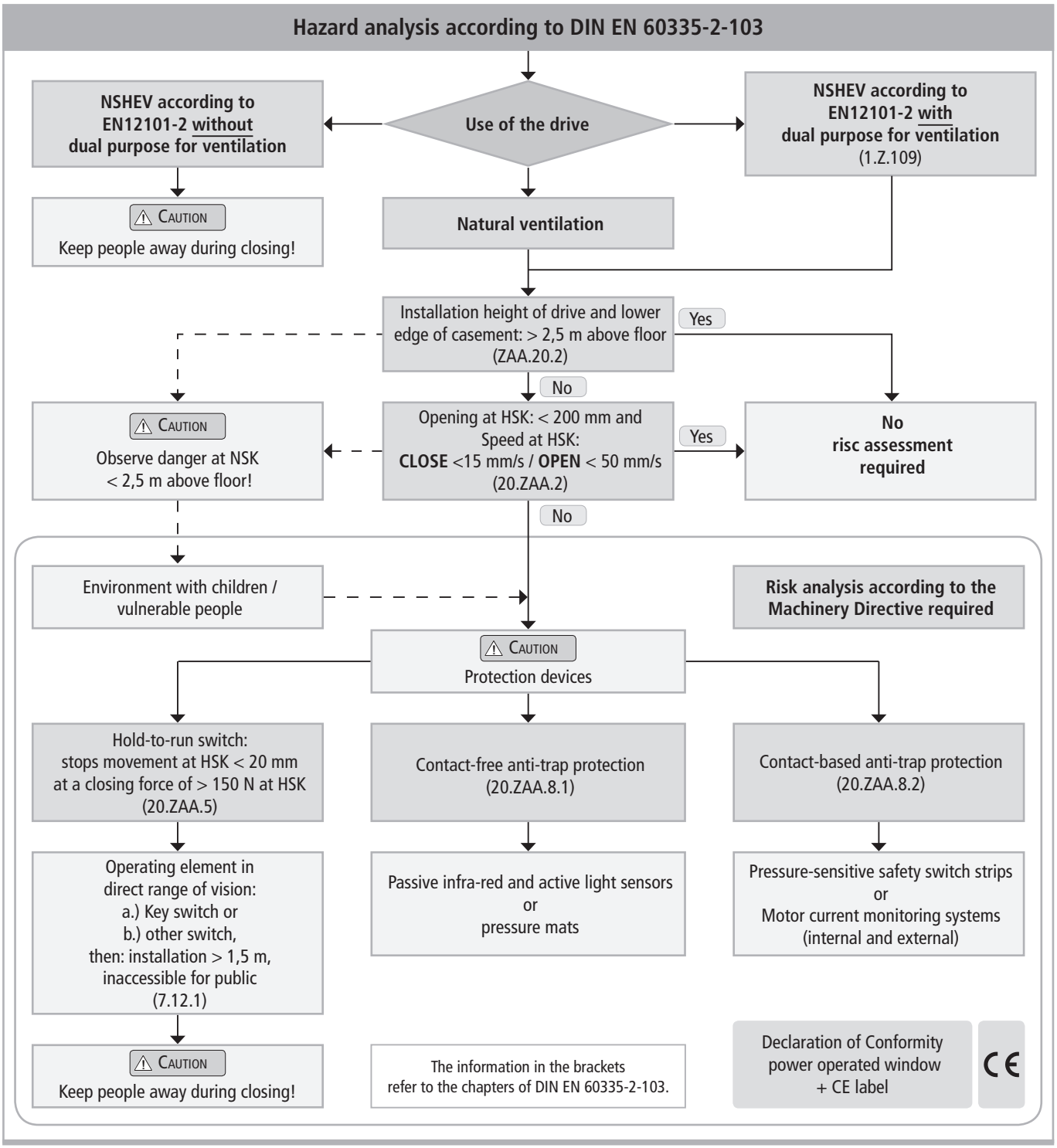

Casement data

Facade:	bottom-hung window top-hung window
Opening direction:	outward opening inward opening
Profile material:	aluminum, steel, plastic or wood

Note The specified casement dimensions are for orientation only.

When inspecting the drives for conformity with on-site requirements the following items must be observed:

- total weight of casement (glass + frame),
- additional loads: snow load / wind load (suction / pressure),
- casement size (FAB x FAH),
- side ratio FAB / FAH,
- installation / inclination angle,
- required opening area (geometric / aerodynamic),
- crosswind influences,
- driving force and stroke,
- mounting space at the window frame and casement frame.

01

Safety instructions

⚠ Warning

It is important to follow these instructions for the safety of persons. These instructions shall be kept in a safe place for the entire service life of the products.

Risk of crushing and entrapment!
Window can close automatically!

The integrated load cut-off stops the drive during closing and opening when the drive is overloaded.
The compressive force is absolutely sufficient to crush fingers in case of carelessness.

Area of application

The drive shall only be used according to its intended use. For additional applications consult the manufacturer or his authorized dealer.

⚠ Warning

Do not misuse the drive for other lifting operations!
Do not allow children to play with this drive or its electric controls, including the remote control!

Always check whether the system complies with current regulations. Special attention must be paid to the opening width, the opening area, the opening time and the opening speed of the window, the temperature range of the drives / external devices and cables as well as the cross section of the connecting cables as function of the cable length and power consumption.

All devices must be permanently protected from dirt and moisture, if the drive is not explicitly suitable for use in wet areas (see technical data).

Installation

These instructions address expert and safety-conscious electricians and / or qualified personnel knowledgeable in electrical and mechanical drive installation.

Note

The safe operation, avoidance of injury to persons and damage to property, as well as risks, is only guaranteed by proper installation and setting according to these installation instructions.

All specifications for installation must be checked independently and, if necessary, adjusted at the installation site. The connection assignment, the electrical supply data (see product lable) and performance limits (see technical data) as well as the mounting and installation instructions of the drive must be strictly observed and adhered to!

Never connect 24 V DC drives to 230 V AC mains voltage!
Danger to life!

Do not reach into the window rabbet or the operating element (chain or spindle) during installation and operation! Ensure that, based on the installation position and the opening movement of the casement, persons cannot be trapped between the driven part of the window and surrounding fixed components (e.g. wall).

Mounting material

The required mounting material must to fit with the drive and occurring load and, if necessary, supplemented.

Note

Before installing the drive, check whether the casement is in good mechanical condition, the weight in balance and whether it opens and closes easily!

Danger spots by crush and shear points

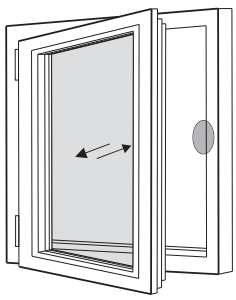

Side-hung

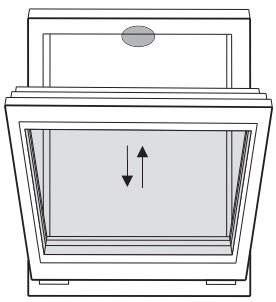

Bottom-hung

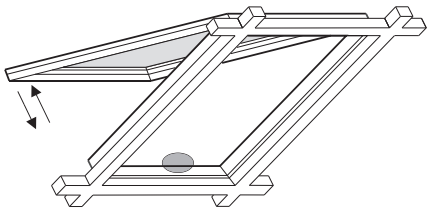

Roof windows / skyskylight domes

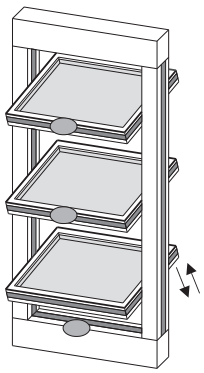

Louvre windows

Danger spots: crush and shear points according to DIN EN 60335-2-103

Crush and shear points
To avoid injuries, **crushing and shear points** between casement and frame must be secured **against entrapment up to an installation height of 2,5 meters above the floor** with appropriate measures. This can be achieved e.g. by using contact-based or contactless protective devices against entrapment, which stop the motion through contact or through interruption by a person. At a force higher than 150 N at the main closing edge the motion must stop within 20 mm. A warning symbol at the opening element must indicate this clearly.

Unintentional or independent opening or falling
Casements are to be hinged or secured such way that in case one of the mounting elements fails it will not crash / slam down or move in an uncontrolled manner by e.g. using double suspensions, safety scissors, casement stays.
Tilting windows shall be equipped with safety scissors or similar devices to avoid damages and risks of injury for persons through improper installation and operation. The safety scissors must be adjusted to the opening stroke of the drive (see technical data) to avoid blocking. The opening width of the safety scissors must be bigger than the drive stroke.

⚠ Warning

The movable casement must be secured against unintentional or independent opening as well as falling down.

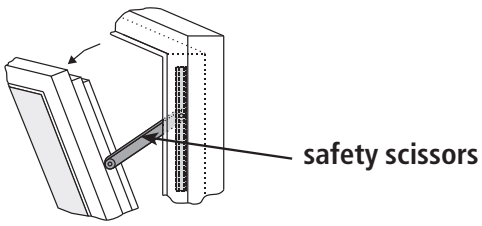

Routing cables and electrical connection
Routing or installing of electrical cables and connections may be performed only by specialist companies. Never operate drives, control units, operating elements and sensors at operating voltages and connections contrary to the specifications of the manufacturer.
All relevant national instructions shall be observed for the installation.

All-pole disconnecting devices shall be installed in the permanent electrical installation or external Control Unit for the drive.
The mains supply lines 230 V / 400 V AC shall be protected separately!

24V DC drives may only be connected to power supply sources that comply with SELV specifications.

Note

In the case of tandem / multiple operation of drives connected in series, the cross-section of the connection cable must be checked autonomously, depending on the total current consumption of the drive system.

⚠ Warning

Damaged mains supply lines of drives with plug connectors may only be replaced by the manufacturer or qualified service / maintenance personnel!
Power cables which are fixed to the drive casing cannot be replaced. If the cable is damaged the device must be scrapped!

The types of cable, cable lengths and cross-sections shall be selected in accordance with the manufacturer's technical data. If necessary, the cable types shall be coordinated with the competent local authorities and energy supply companies. Low-voltage lines (24 V DC) shall be routed separate from the high-voltage lines. Flexible cables may not be flush-mounted. Freely suspended cables shall be equipped with strain reliefs.

Cables must be laid such way that they cannot be sheared off, twisted or bent during operation. Drive cables laid inside window profiles must be protected by insulating tubes with a sufficient temperature resistance. Through holes shall be equipped with cable sleeves!

Clamping points shall be checked for tightness of threaded connections and cable ends. Access to junction boxes, clamping points and external drive control boxes shall be ensured for maintenance work.

Commissioning, operation and maintenance
After the installation and after each modification in the set up all functions shall be checked with a trial run. It shall be ensured that drive and casement are set correctly and that security systems, if available, are functioning properly. **After the installation of the system is completed the end-user shall be instructed in all important operating steps.** If necessary, he must be advised of all remaining risks / dangers.
The end-user shall be specifically instructed that no additional forces, except pushing and pulling forces in the opening and closing direction of the casement, may be applied to the spindle, chain or lever of the drive.

Note Post warning signs!

During the proper assembly of drives with mounting elements at a window, and the connection to an external control unit, the interfaces resulting from mechanical and electrical performance characteristics of single elements shall be observed.

⚠ Caution Other persons must be kept away from the casement when a hold-to-run switch (pushbutton) is operated or when a window, which has been opened by a smoke and heat exhaust system, is closing!

⚠ Caution The operating element of hold-to-run switches must be installed within direct view from the window, but apart from moving elements. If the switch is not a key-operated switch it must be installed at a minimum height of 1,5 m and inaccessible to the public!

⚠ Caution Do not allow children to play with permanently mounted control devices and keep remote controls out of reach for children!

During cleaning, maintenance work and while exchanging parts the drive must be completely disconnected from the power supply and secured against unintentional reactivation.

⚠ Warning Do not actuate the drive or the casement when repair or re-setting works are performed!

Replacement parts, fasteners and controls
The drive shall only be operated with control devices from the same manufacturer. There is no liability, warranty or customer service if third-party parts are used. Exclusively original spare parts of the manufacturer shall be used for mounting elements or expansions.

Ambient conditions
The product may not be subjected to impacts or falls, or to vibrations, moisture, aggressive vapors or other harmful environments, unless the manufacturer released it for one or more of these environmental conditions.

- **Operation:**
  Ambient temperature: -5 °C … +60°C
  Relative humidity: < 90% less 20°C;
  < 50% less 40°C;
  no formation of condensation

Note Observe temperature range during installation!

- **Transport / Storage:**
  Storage temperature: -5°C … +40°C
  Relative humidity: < 60%

Accident prevention regulations and workmen's compensation insurance guidelines
For work on or in a building or building part the provisions and instructions of the respective accident prevention regulations (local workmen's compensation insurance guidelines) shall be observed and adhered to.

Declaration of Conformity and of Incorporation
The drive is manufactured and inspected in accordance with European guidelines. The respective Declaration of Conformity and of Incorporation is on hand.
In case that the use of the drive differs from the intended use, a risk evaluation for the power operated window shall be performed and a Declaration of Conformity according Machinery Directive 2006 / 42 / EG issued.

DATA SHEET BDC ECO 230V AC

230V

- Application: natural ventilation
- Aluminium housing, anodysed finish
- Nickel-plated steel chain

- Internal cut-off switch
- Stroke length adjustable with DIP switch (100 + 200 + 300 + 400 mm)
- **Casement bracket and the frame bracket are included**

Order Data					
s [mm]	L [mm]	Version	Finish	PU / pcs.	**Part.-No.**
100 + 200 + 300 + 400	387	**BDC Eco 300 230 V AC**	E6 / C - 0	1	**10.100**

02

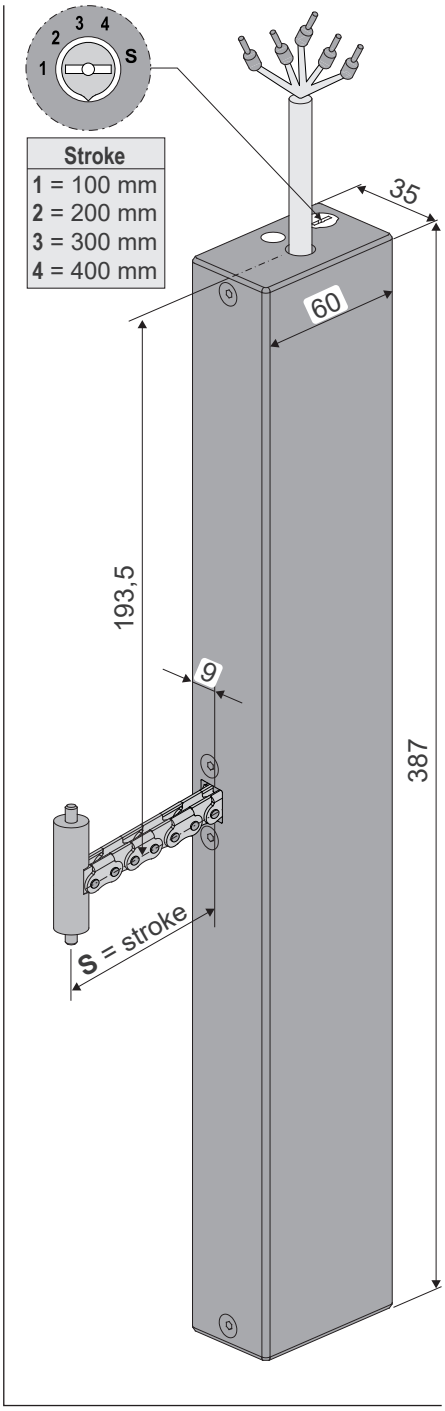

Technical Data		
U_N	Rated voltage	230 V AC (50 Hz)
I_N	Rated current	0,13 A
I_A	Cut-off current	0,2 A
P_N	Rated power	25 W
DC	Duty cycle	5 cycles (ED 30 % - ON: 3 min. / OFF: 7 min.)
	Protection rating	IP 32
	Ambient temperature range	-5 °C ... +60 °C
F_Z	Pulling force max.	300 N
F_A	Pushing force max.	300 N
F_H	Pullout force	1.800 N (fastening depended)
	Chain	Nickel-plated steel chain
	Connecting cable	non-halogen, grey 5 x 0,5 mm², ~ 3 m
v	Speed	12,5 mm/s 12,5 mm/s
s	Stroke	100 mm + 200 mm + 300 mm + 400 mm adjustable with DIP switch
L	Length	387 mm
	Sound pressure level:	≤ 70 dB (A)

Casement Bracket

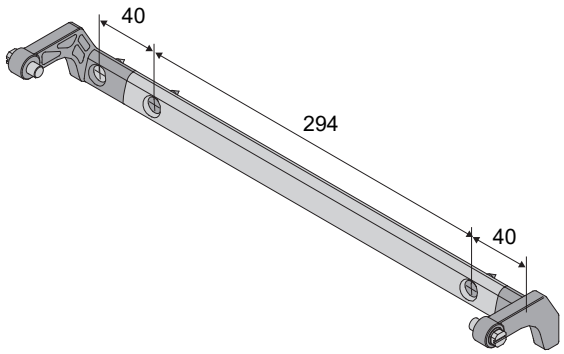

Frame Brackets

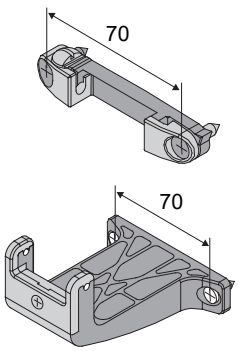

DATA SHEET BDC ECO 24V DC

24V

- Application: natural ventilation and smoke and heat exhausting systems (SHEVS)
- Aluminium housing, anodysed finish
- Nickel-plated steel chain

- Internal cut-off switch
- Stroke length adjustable with DIP switch (100 + 200 + 300 + 400 mm)
- **Casement bracket and the frame bracket are included**

Order Data					
s [mm]	L [mm]	Version	Finish	PU / pcs.	**Part.-No.**
100 + 200 + 300 + 400	387	**BDC Eco 300 24 V DC**	E6 / C - 0	1	**10.101**

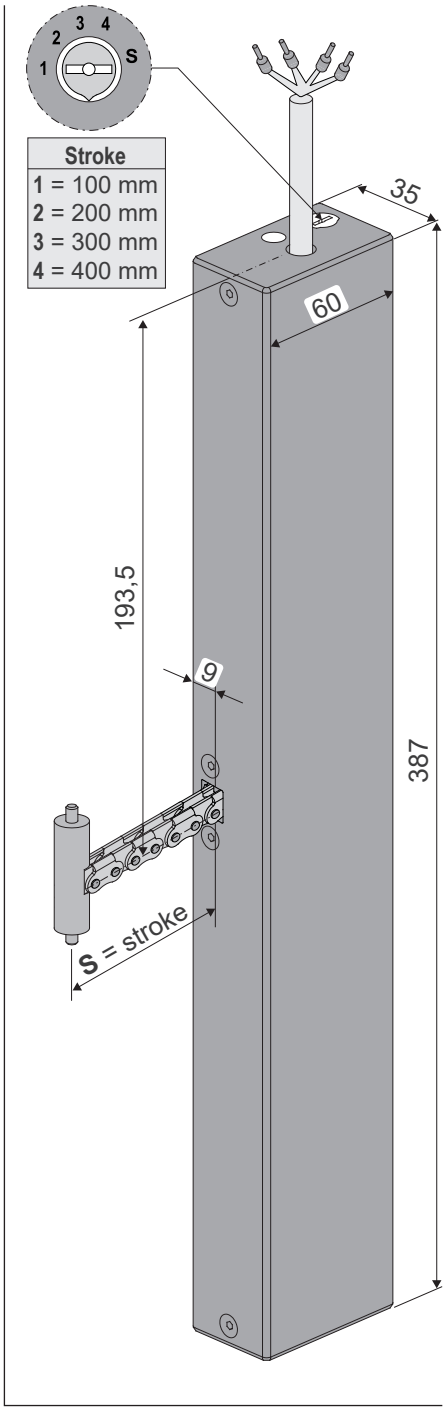

Technical Data		
U_N	Rated voltage	24V DC (19 V ... 28 V)
I_N	Rated current	0,8 A
I_A	Cut-off current	1,0 A
P_N	Rated power	24 W
DC	Duty cycle	5 cycles (ED 30 % - ON: 3 min. / OFF: 7 min.)
	Protection rating	IP 32
	Ambient temperature range	-5 °C ... +60 °C
F_Z	Pulling force max.	300 N
F_A	Pushing force max.	300 N
F_H	Pullout force	1.800 N (fastening depended)
	Chain	Nickel-plated steel chain
	Connecting cable	non-halogen, grey 4 x 0,5 mm², ~ 3 m
v	Speed	12,5 mm/s 12,5 mm/s
s	Stroke	100 mm + 200 mm + 300 mm + 400 mm adjustable with DIP switch
L	Length	387 mm
	Sound pressure level:	≤ 70 dB (A)

Casement Bracket

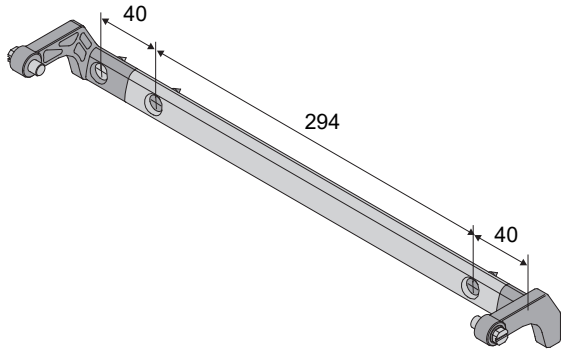

Frame Brackets

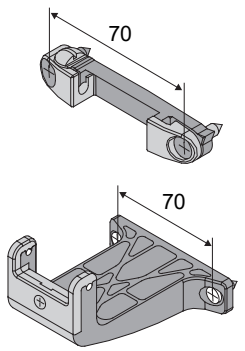

Application areas and Casement sizes

(Casement size max. 4 m² - depending on the system)

Bottom-hung casement und Top-hung casement inward opening

FAB min. = 387 (L) + 100 mm
FAB > 1,30 m = mount 2 drives

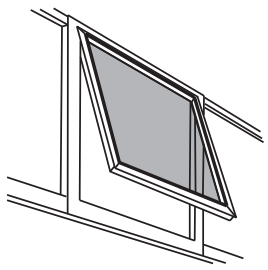

Top-hung casement

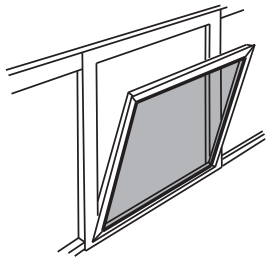

Bottom-hung casement

Bottom-hung casement und Top-hung casement outward opening

FAB min. = 387 (L) + 100 mm
FAB > 1,30 m = mount 2 drives

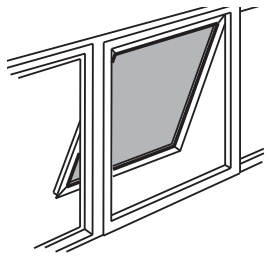

Top-hung casement

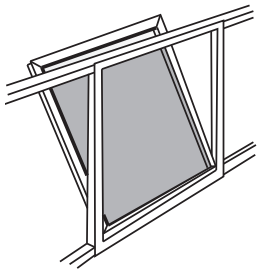

Bottom-hung casement

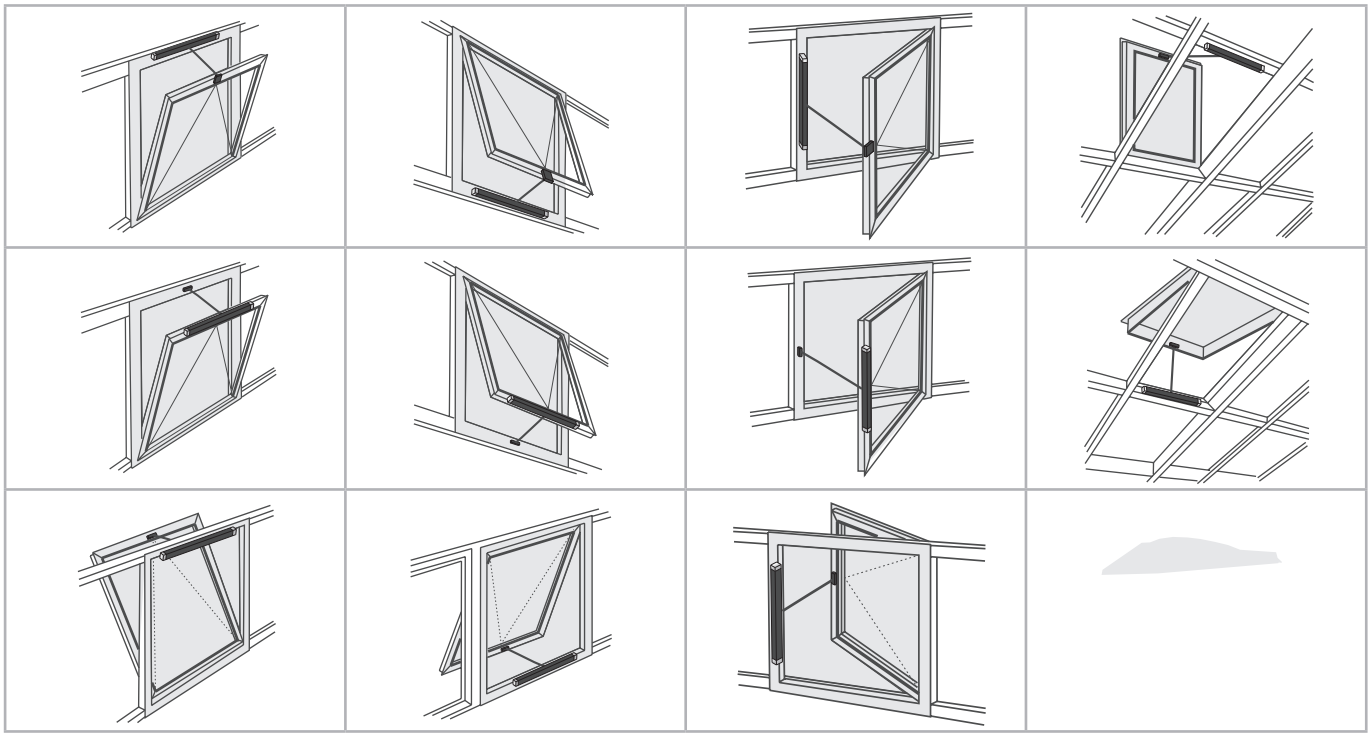

Explanations on the product label

The product label provides information on the most important caracteristics, such as:

- manufacturer's address
- article reference number and name
- technical caracteristics
- date of manufacturing with firmware version
- serial number
- certifications

Note Never install and operate damaged products.

In the event of any complaints, please indicate the product serial number (SN) (see product label).

Exemplary representation

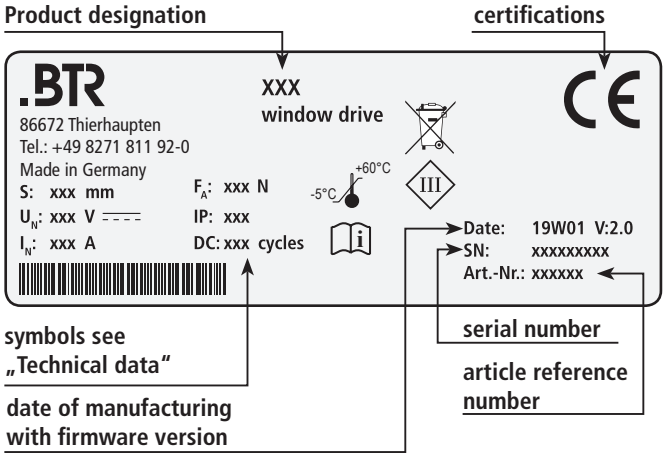

Installation step 1: Inspection before the installation

⚠ **Warning**

Important instructions for a safe installation. Observe all instructions, wrong installation may result in serious injury!

Storage of drives at the construction site

Protective measures against damages, dust, moisture or contamination shall be taken. Store drives intermediately only in dry and well ventilated rooms.

Inspection of drives before installation

Check drives and window before installation for good mechanical condition and completeness. The chains / spindles of the drives must be extendable or retractable easily. The casement must run smoothly and the weight must be in balance.

The test procedure of drives may only be performed on a non-slip and secured mat or a test fixture. During the test run the test element must not be interfered with. The test my only be conducted by or under the supervision of expert personnel.

For testing chain drives the chain must be extended and retracted at an angle of approx. 90°. The spindle tubes of spindle drives in round housing tubes must be secured against independent spinning before starting the test to avoid deviations in the integrated position encoder.

Inspection of the intended use

The planned use of the drive must be checked for compliance with its intended use. If used otherwise the liability and warranty claim expires.

Predictable misuse

It is imperative that foreseeable misuse of drives is avoided! Here are a few examples:

- do not connect 24 V DC drives to a 230 V AC mains voltage,
- observe synchronous run and sequence control by drives with multiple interconnection (if existing),
- use drives only indoors,
- avoid additional force influences, e.g. transverse forces.

Testing mechanical requirements

Prior to the start of the installation check whether :

- the support surface and the profile static for the load transmission is sufficient,
- a support construction for the secure fastening of the drives is required,
- cold bridges (thermal separation) are avoidable at action points,
- there is sufficient space for the swivel movement of the drive.

If not, counter measures must be taken!

⚠

The support surface of the frame brackets or casement brackets must rest completely on the window or frame profile. There must be no tilting of the fastening elements during extension and retraction of the drives. A safe and solid fastening must be ensured at the window profile.

⚠ **Caution**

It is imperative that the sufficiently mechanical stiffness of the fastener type as well as of the swivel range of the drive is observed.
If this is not guaranteed another type of fastening or another type of drive must be selected.

Installation step 2: Installation prerequisite and Installation preparation

The following conditions must be fulfilled for the installation of the drives so they can be properly assembled with other parts and constructed to a complete machine at the window without impairing the safety and health of persons:

1. The design of the drive must fulfill the requirements.
2. The fastening accessories (casement brackets or frame brackets) must fit the window profile; the profile-dependent hole lay-out must be complied with.
3. The space required for the installation of the drive on the frame and casement profile must be sufficient.
4. The window must be in perfect mechanical condition before the installation. It should open and close easily.
5. The fastening material for the installation of the drive must fit the window material (see table).

Wood windows	Wood screws: i.e. DIN 96, DIN 7996, DIN 571 round head with slot, round head with cross, hex head,special type	
steel, stainless steel, aluminum windows	Self-tapping screws, thread screws, sheet-metal screws i.e. ISO 4762, ISO 4017, ISO 7049 , ISO 7085, DIN 7500 cylinder head with hex socket, internal serration (Torx), Phillips head or external hex head blind rivet nut	
plastic windows	Screws for plastic i.e. DIN 95606, DIN 95607, ISO 7049, ISO 7085, DIN 7500 round head with cross, external hex head, Torx	Recommendation: if possible, screw through two cavity webs

Tools required

- Marker
- Grains
- Hammer
- Screwdriver (slotted-head, cross or Torx) SW5
- Power drill
- Threadlock adhesive
- possibly a tool for blind rivet nuts (size 6)

Check window data on site

- Measure FAB and FAH.
- Check / calculate weight of casement.
  If unknown, it can be determined approximately with the following formula:

G (Casement weight) [kg] = **FAB** [m] * **FAH** [m] * **Glass thickness** [mm] * **2,5** glass-density * **1,1** frame share

- Check / calculate the required drive force and compare with drive data . If unknown, it can be determined approximately with the following formula:

F [N] = **Facade** $\frac{5{,}4 * G\,[kg] * s\,[m]}{a\,[m]}$

F [N] = **Roof** $\frac{5{,}4 * G\,[kg] * FAH\,[m]}{a\,[m]}$

a = Distance of action point to hinges
F = Drive force
s = Stroke

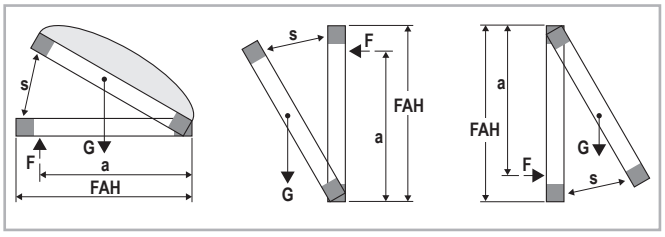

Scope of delivery:

Prior to assembly, check items quantity in the delivery for completeness.

Accessories: Chain drive BDC Eco	
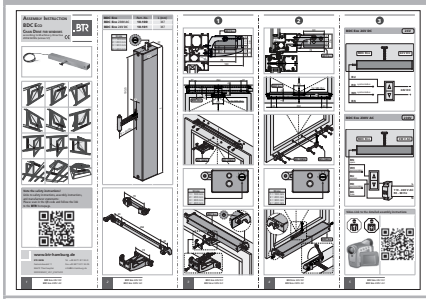	Assembly Instructions
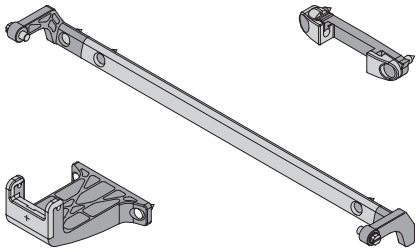	Frame bracket Casement brackets
	Warning sign sticker „Risk of entrapment"

Installation step 3: Brackets (Dimensions and Drill Holes)

Dimensions and Drill holes

Casement bracket for bottom-hung windows

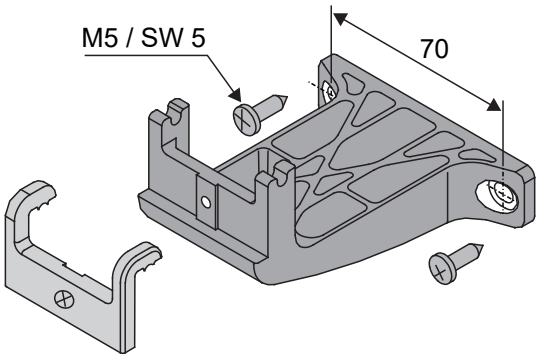

Casement bracket for top-hung windows

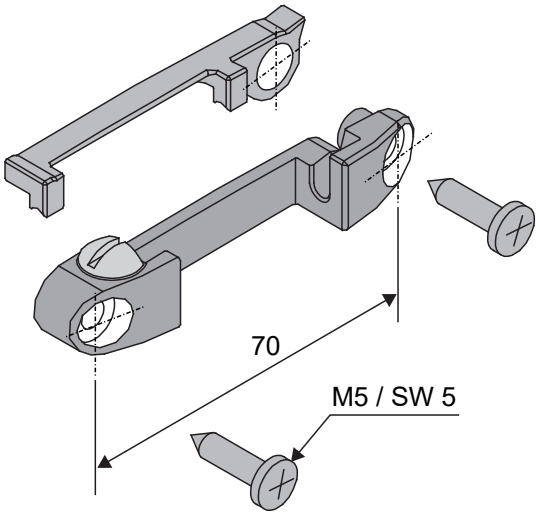

Frame bracket

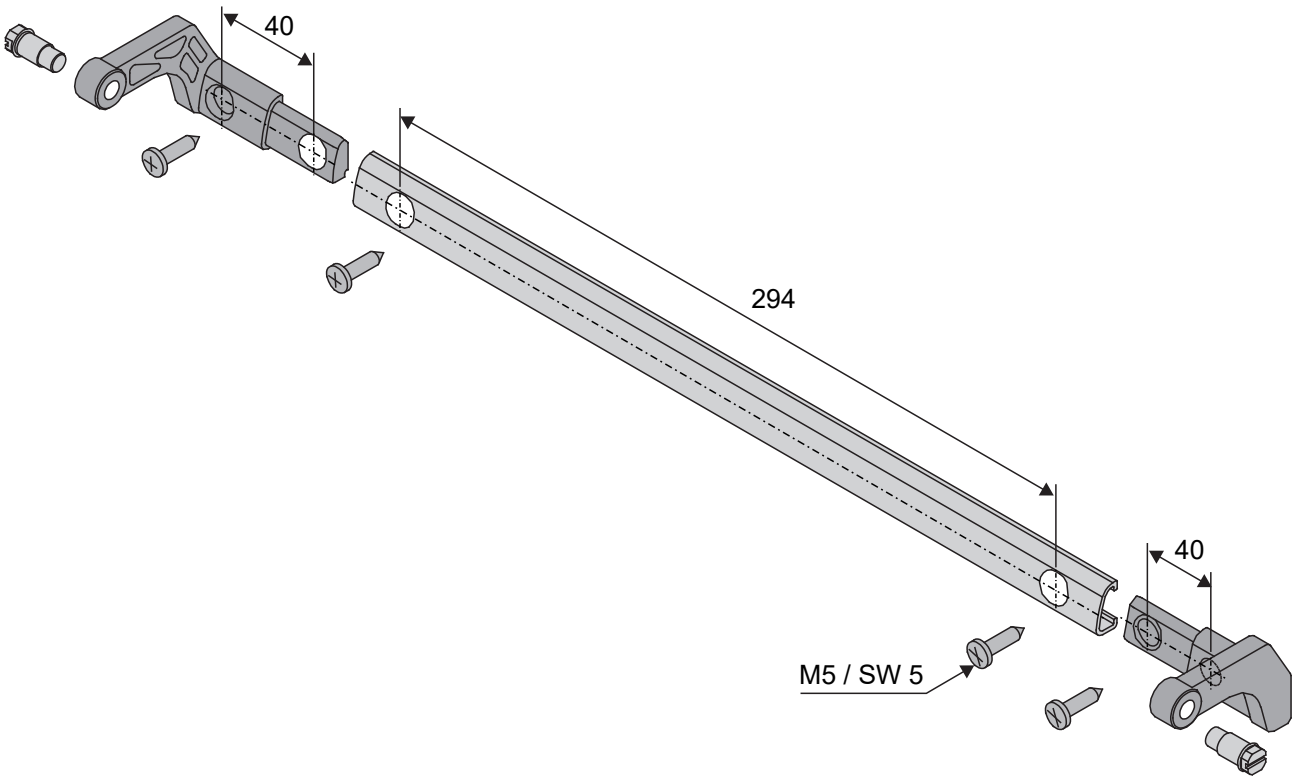

Application examples

Bottom-hung inward opening windows
On the window frame - main closing edge - swiveling drive mounting

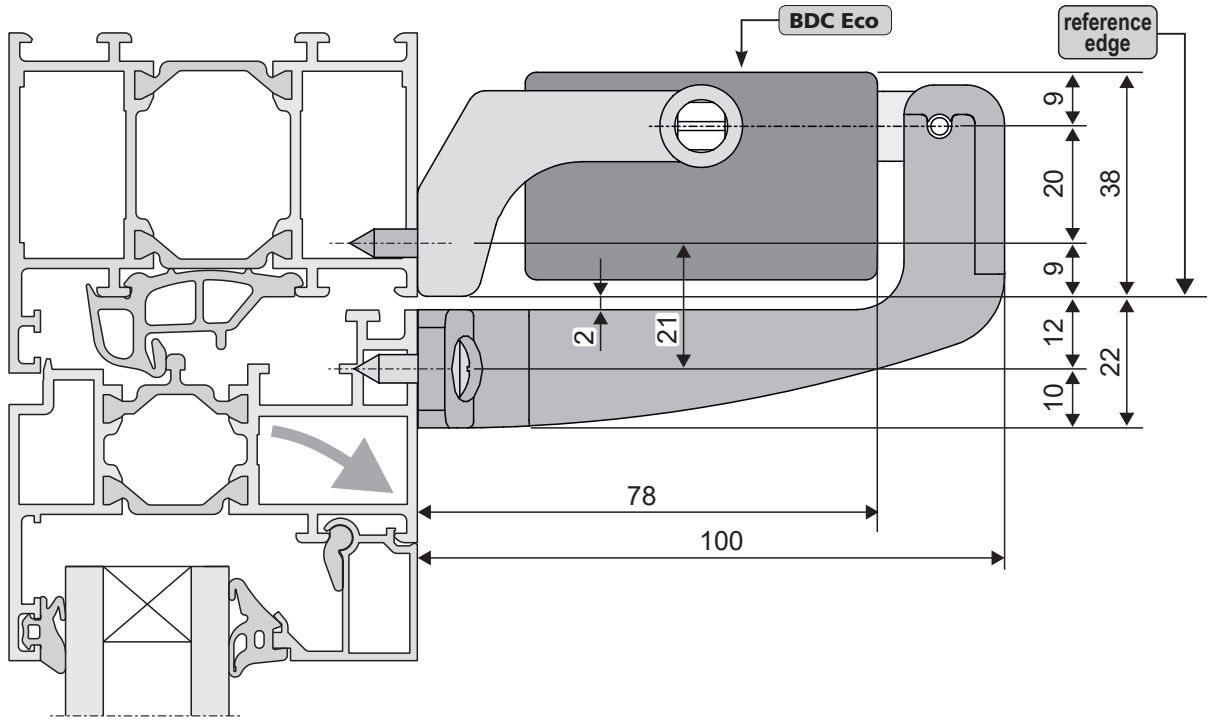

Space on the frame = **38 mm**

Top-hung outward opening windows
On the window frame - main closing edge - swiveling drive mounting

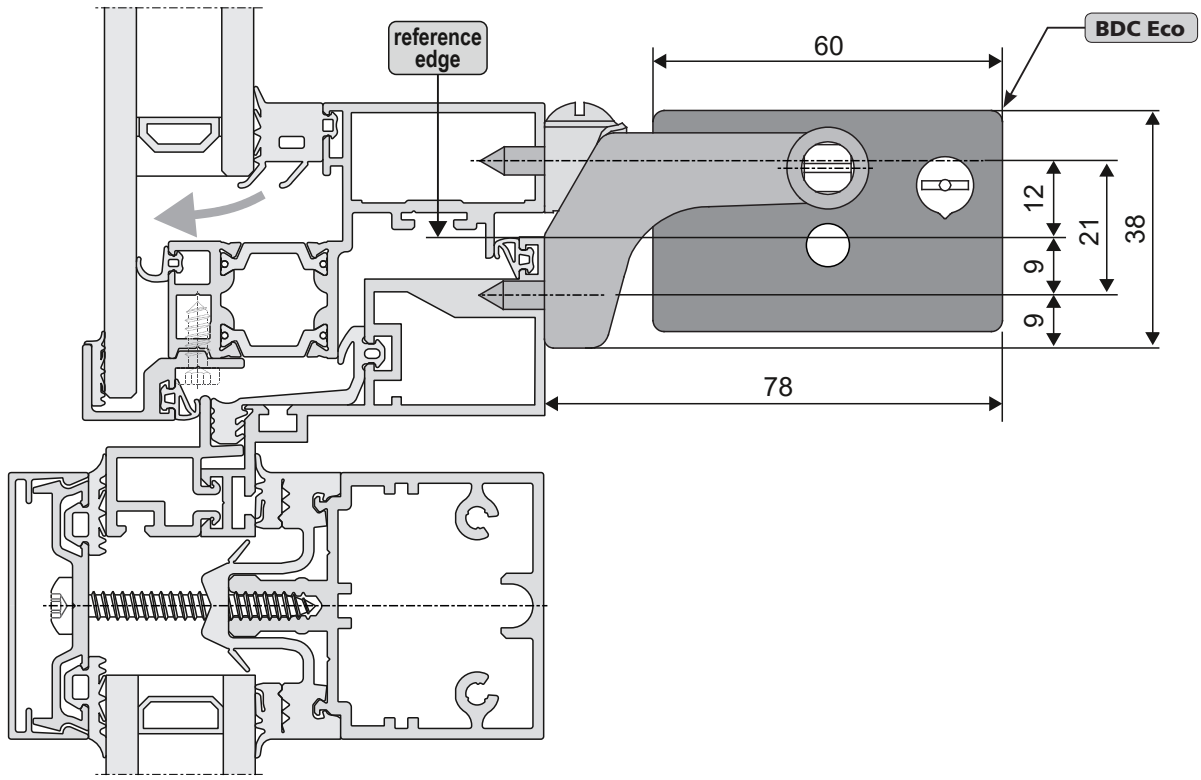

Space on the casement = **38 mm**

Installation step 4: Hole layout for frame bracket and casement brackets

Bottom-hung inward opening windows
On the window frame - main closing edge - swiveling drive mounting

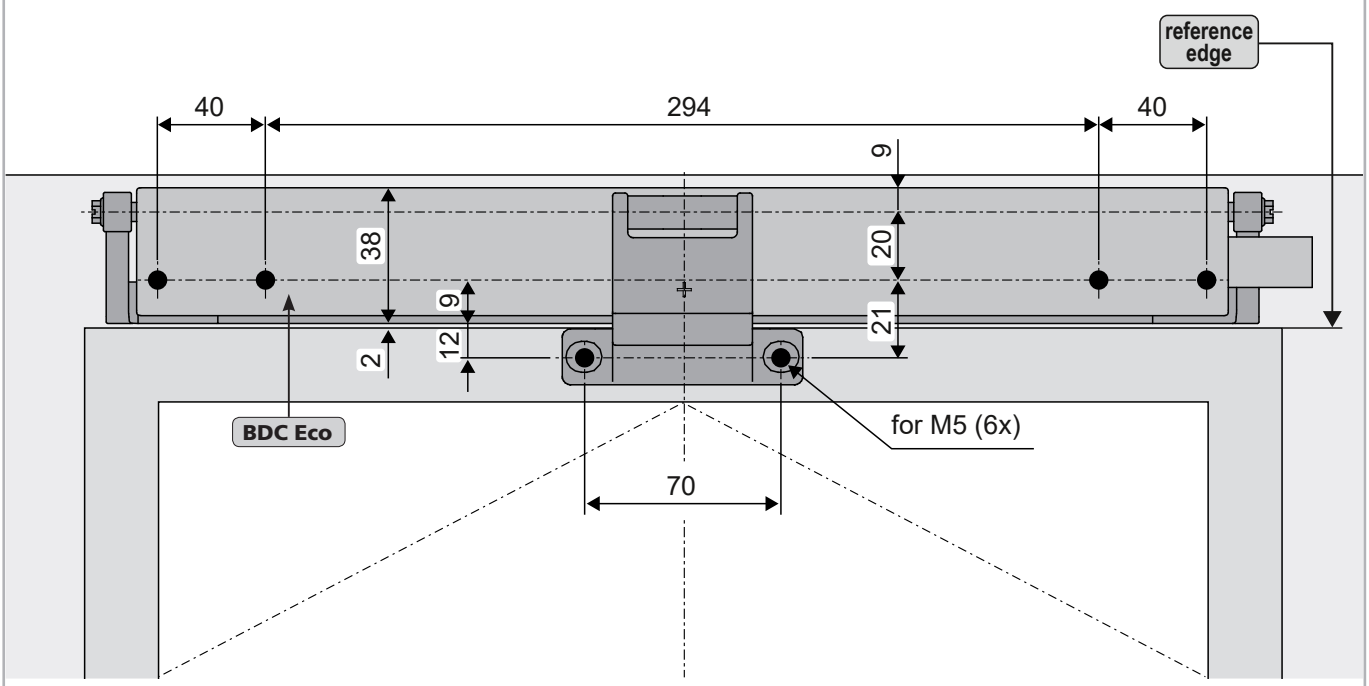

Top-hung outward opening windows
On the window frame - main closing edge - swiveling drive mounting

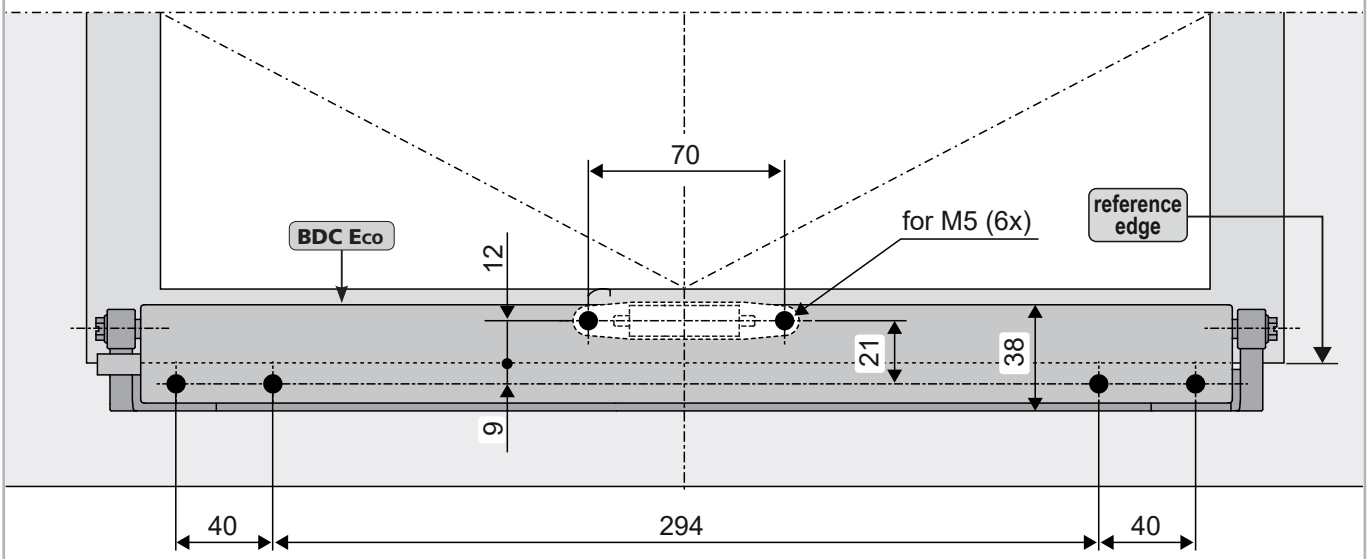

Installation step 5a: Bottom-hung Inward opening windows
On the window frame - main closing edge - swiveling drive mounting

- Determine fastenings for **frame bracket ❷** and **casement bracket ❸**.
- Produce drill holes with appropriate cross-section (For mounting dimensions see drill holes „Installation stepe 3 and 4“ or project-specific documents and drawings).

Note Screws - for mounting on the window - are included in the scope of delivery. If other screws are required, these must be provided by the customer!

Carefully clear away drilling swarfs to prevent seals from being damaged.
Avoid surface scratches, for example by using masking tape.

- Screw the **frame bracket ❷** onto the window frame (**M5**).
- Screw the **casement bracket ❸** onto the casement (**M5**).

Make sure they are parallel to casement edge. „Casement bracket“ center and „chain output“ must be in line.

- Secure fasteners against loosening; e.g. by applying removable thread-locking compound such as “Loctite”.

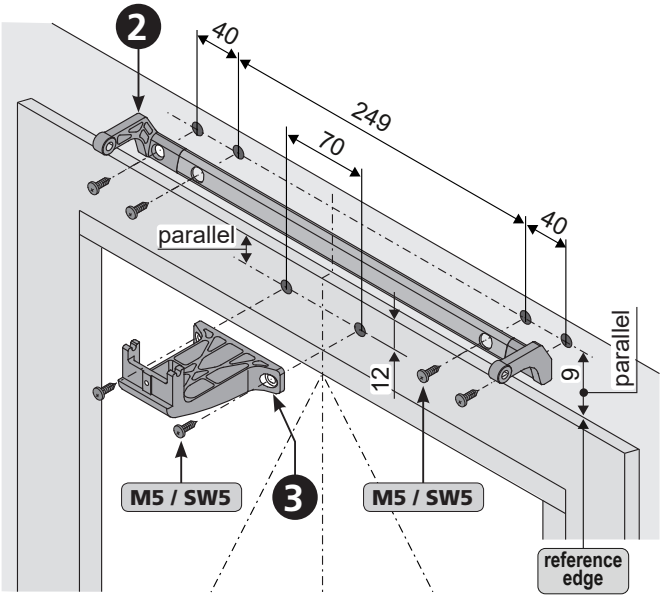

- Select the stroke of the drive **BDC Eco ❶** with the selector switch ❹. If there are several synchronized drives, only turn the selector switch ❹ of **one** of the drives **BDC Eco** to the desired stroke.

Stroke
1 = 100 mm
2 = 200 mm
3 = 300 mm
4 = 400 mm

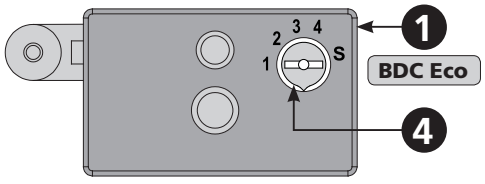

- Attach drive **BDC Eco ❶** to the **frame bracket ❷**.
- Secure the drive **BDC Eco ❶** with the enclosed pin-screws ❺.

Drive **BDC Eco ❶** should freely swivel - between the **frame bracket ❷**.

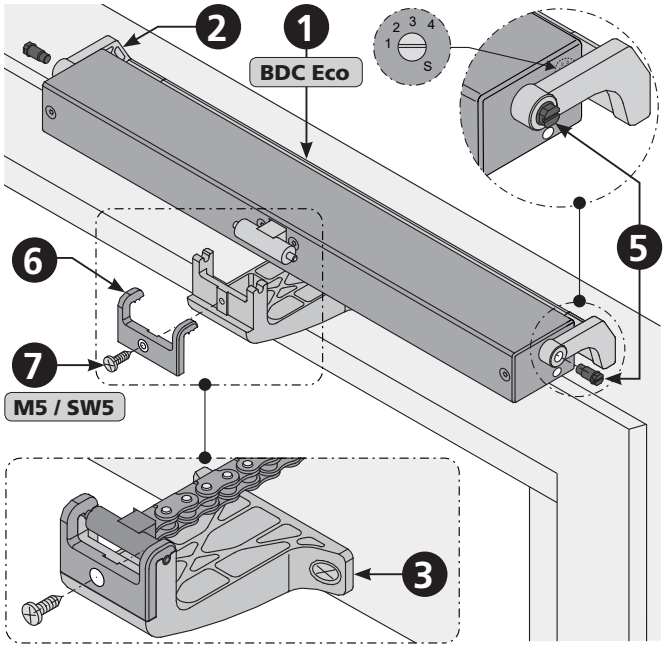

- Connect control voltage of the drive **BDC Eco ❶**.
- Move out the chain of drive **BDC Eco ❶** approx. 100 to 150 mm.

Note For multi-drive operation actuate all drives **BDC Eco ❶ together**.

- Secure chain in the **casement bracket ❸** with the enclosed holder ❻ and screw ❼.

Note cable routing!
(see chapter: Cable routing)

Setting the end position! (see chapter: Automatic setting of the end position)

Check swiveling area! (see chapter: Safety Check and Performing Test Run).

Installation step 5b: Top-hung outward opening windows
On the window frame - main closing edge - swiveling drive mounting

- Determine fastenings for **frame bracket ❷** and **casement bracket ❸**.
- Produce drill holes with appropriate cross-section (For mounting dimensions see drill holes „Installation stepe 3 and 4“ or project-specific documents and drawings).

Note Screws - for mounting on the window - are included in the scope of delivery. If other screws are required, these must be provided by the customer!

⚠ Carefully clear away drilling swarfs to prevent seals from being damaged.
Avoid surface scratches, for example by using masking tape.

- Screw the **frame bracket ❷** onto the window frame (**M5**).
- Screw the **casement bracket ❸** onto the casement (**M5**).

⚠ Make sure they are parallel to casement edge. „Casement bracket“ center and „chain output“ must be in line.

- Secure fasteners against loosening; e.g. by applying removable thread-locking compound such as “Loctite”.

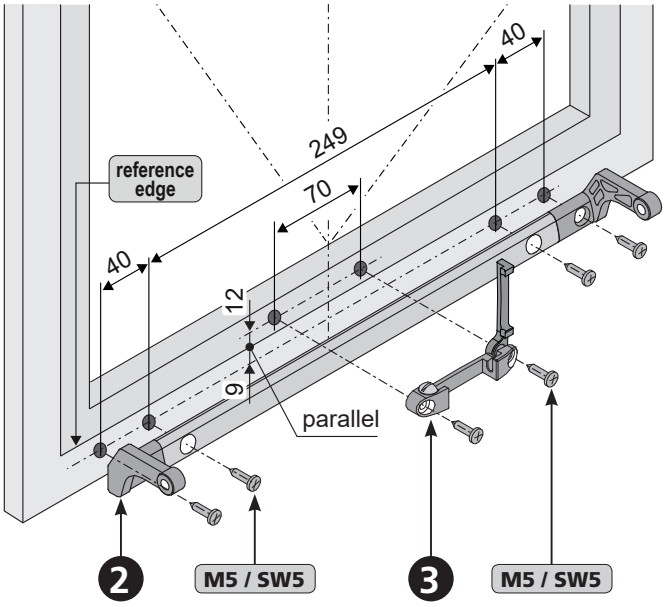

- Select the stroke of the drive **BDC Eco ❶** with the selector switch ❹. If there are several synchronized drives, only turn the selector switch ❹ of **one** of the drives **BDC Eco** to the desired stroke.

Stroke
1 = 100 mm
2 = 200 mm
3 = 300 mm
4 = 400 mm

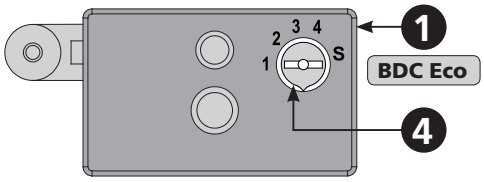

- Attach drive **BDC Eco ❶** to the **frame bracket ❷**.
- Secure the drive **BDC Eco ❶** with the enclosed pin-screws ❺.

⚠ Drive **BDC Eco ❶** should freely swivel - between the **frame bracket ❷**.

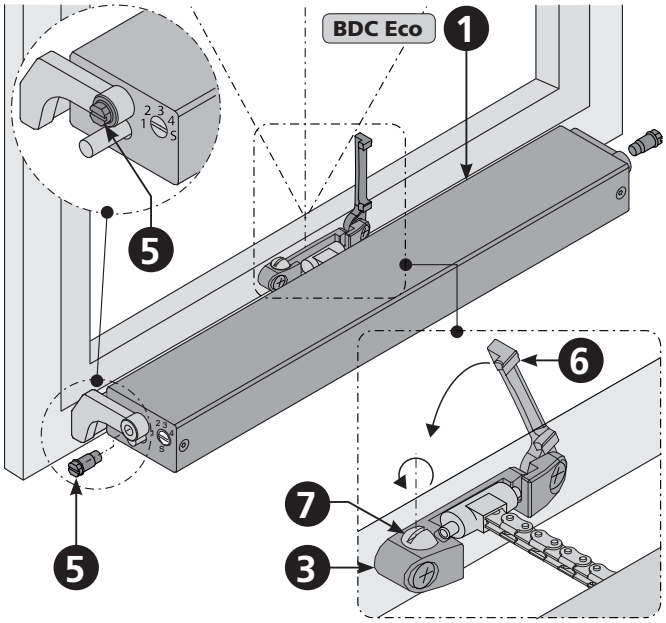

- Connect control voltage of the drive **BDC Eco ❶**.
- Move out the chain of drive **BDC Eco ❶** approx. 100 to 150 mm.

Note For multi-drive operation actuate all drives **BDC Eco ❶ together**.

- Secure chain in the **casement bracket ❸** with the holder ❻ and turn the screw ❼.

⚠ Note cable routing!
(see chapter: Cable routing)
Setting the end position! (see chapter: Automatic setting of the end position)
Check swiveling area! (see chapter: Safety Check and Performing Test Run).

Installation step 6: Cable routing

Cable routing on the casement

Cable on casement	Cable in glazing bead
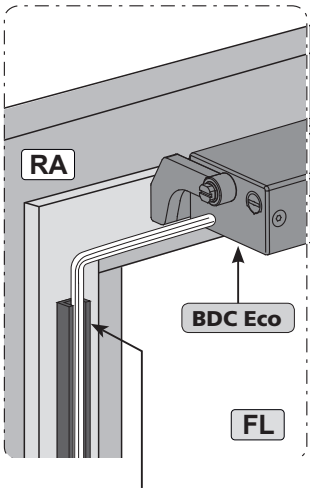	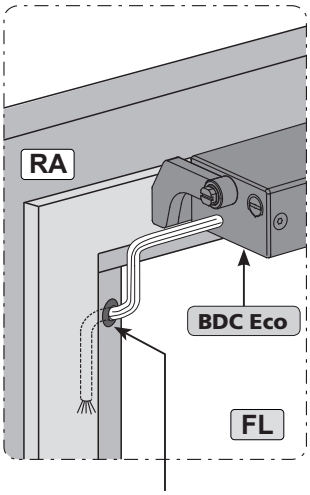
Cable duct glued on (in addition secured with countersunk screws against breaking away)	**Drill hole in glazing bead** (cable bushing protects against damage to cable).

Connection cable routing on the frame or transom:
- Cable must be protected against damage (shearing-off, kinking, splitting), i.e. by using bushings.

Upon removal of the glazing bead is the danger that the glass may fall.

Cable crossover without protective cable hose	Cable crossover with protective cable hose
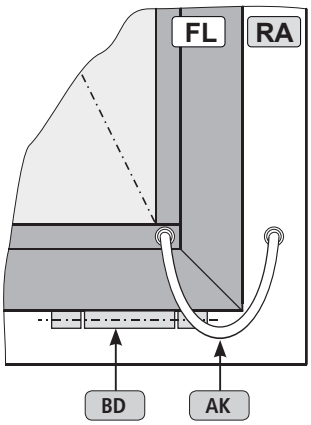	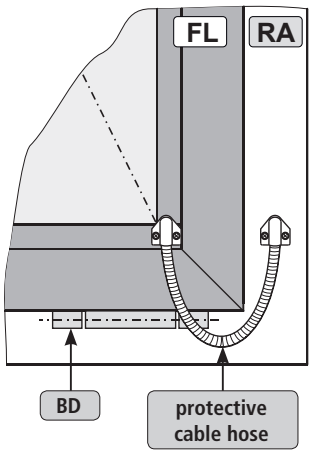

Connection cable routing on the hinge side:
- Make sure that during opening or closing procedure the cable will not be damaged by shearing-off, kinking, crushing.
- Protect cable feedthrough in profile e.g. by using cable bushings, cable transitions.

Cable routing on the window frame

- Route cable on the frame or mullion/transom. Cable must be protected against damage (shearing-off, kinking, splitting).

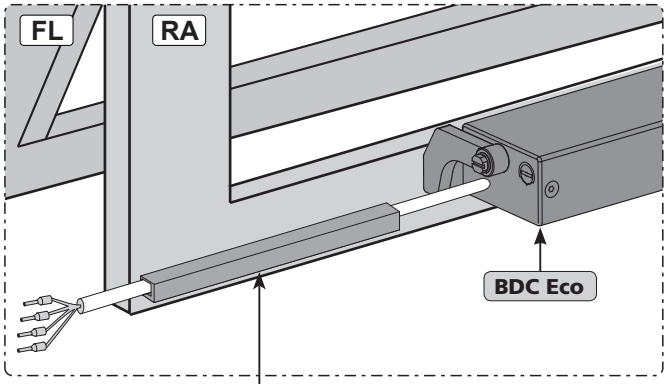

Cable duct glued on
(in addition secured with countersunk screws against breaking away)

Installation step 7: Electric Connection

Make sure when establishing the connection that there is no voltage at the terminals!
Unused wires must be safely insulated!

Wire colour coding	
Colour	**DIN IEC 757**
black	BK
brown	BN
blue	BU
red	RD
white	WH

Connection assignment **24V**

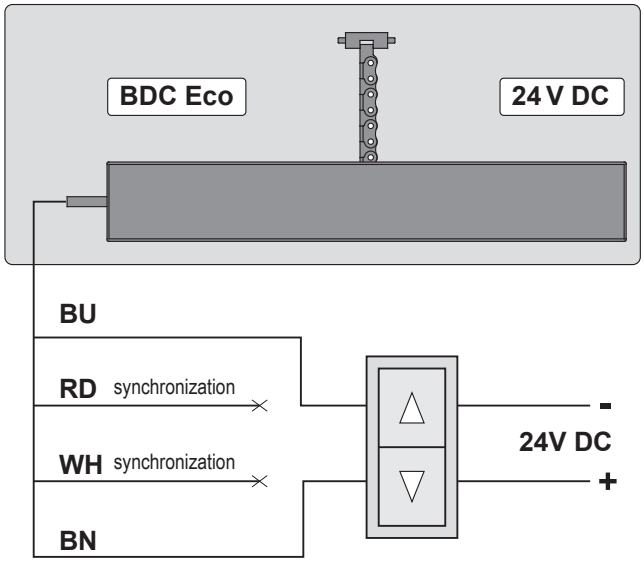

Connection assignment **230V**

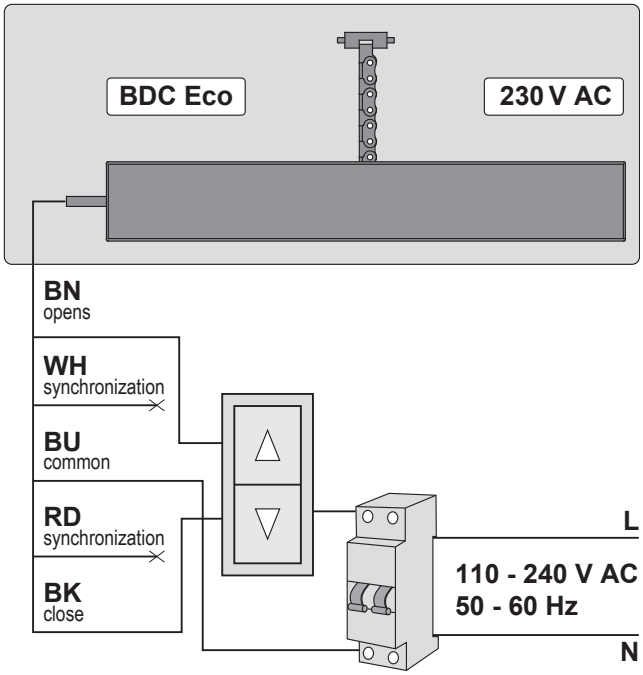

Installation step 8:
Automatic setting of the end position:

- Press either control (opening or closing) and do not power off the drive until the window is fully closed, then power off the drive and wait two seconds.
  Warning: when you power on the drive, be sure the first movement is the closing one.
- Open the window and make sure the drives stroke matches the selected one. If not, check the selector switch position and select the required stroke.
- Close the window and make sure the chain slows down on nearing the end limit point and that the window is fully closed.
- If these conditions are met, the drive is ready for use. Otherwise repeat the end limit point adjustment - (See chapter: Adjusting the closing end limit point).

Installation step 9:
Supply lines of Control Unit to the Drives

Observe current regulations and guidelines regarding the "Fire behavior of building materials-circuit integrity maintenance of electric cable systems" (E30, E60, E90) and the prescribed constructional regulations!

Recommendation For safety reasons a cable of the next higher wire cross section should be selected.

Formula to calculate **24V**
the required wire cross-section of a supply line

$$A\ mm^2 = \frac{I_{A\ (total)} * L_{m\ (length\ supply\ line)} * 2}{2{,}0\ V_{(voltage\ drop)} * 56\ m / (\Omega * mm^2)}$$

Calculation example

Available data:
- cut-off current per drive (i. e. 2 x 4.0A) from data sheet
- length to be bridged from the last window to the control unit (i. e. 10 meters)

$$A = \frac{(2 * 4{,}0A) * 10m * 2}{2{,}0V * 56m / (\Omega * mm^2)}$$

A = 1,42mm² -> **1,5mm²** choosen

Laying and connecting the drive cable

- Avoid extreme temperature differences in the installation area (danger of condensation).
- Set clamping point close to window and ensure accessibility.
- Ensure expansion possibilities of the drive and the drive cable.
- Consider the cable length and the cross sections of the drives supply lines.

Installation step 10: Safety check and Test run

Check the mounted system for its safety; perform test run and commissioning.

Safety test:

- Connect operating voltage.
- Check fastening (frame brackets, casement brackets) for firm fit or tightening.

Test run:

- Visual inspection of casement movements.
- Stop immediately by malfunction!
- Pay attention to collision with facade construction and correct installation, if required.

Risk evaluation:

Before operating a power-operated window to which window drives were mounted, which were sold by the manufacturer as incomplete machines according to installation declaration, the possible risk to ahazard of persons must be determined, evaluated and minimized by taking appropriate technical measures in accordance with the Machinery Directive. Separate documents for performing a risk assessment can be downloaded from the homepage of

Firm BTR GmbH
(**www.btr-hamburg.de**).

Operation of the power-operated window

When operating the power-operated window safety instructions must be observed, specifically those pertaining to commissioning, operation and maintenance.

Help in case of Malfunctions, Repairs and Maintenance

Professional repair of a defect drive can only be performed at the manufacturer's factory or manufacturer-certified specialist company. Unauthorized opening or manipulation of the drive terminates warranty.

1. Exchange defect drives or have them repaired by the manufacturer.
2. In case of problems during installation or normal operation the following table might be useful:

Problem	Possible causes	Possible solutions
Drive does not start	• Duration of mains power supply too short	• Adjust supply voltage as specified in the technical documentation
	• Drive run direction not correct	• Check drive cables
	• Connecting cable not connected	• Check all connection cables
	• Power supply / Control Unit voltage incorrect, too high or too low (see data sheet)	• Check power supply unit and replace if necessary
	• No mains supply to power supply unit / Control Unit (no voltage)	• Connect power supply
	• Drive has shut down on overload	• First move drive in CLOSE position
Drive doesn't start after having been in operation several times	• Operating time has been exceeded, drive has been overheated	• Wait until drive has cooled down and start again
	• See possible solutions above associated with „Drive doesn't start"	• See possible solutions associated with: "Drive doesn't start"
Drive doesn't close	• Closing edge safety mechanism has been triggered (if existing)	• Release safety area for operation and reset closing edge safety mechanism
	• See possible solutions above associated with „Drive doesn't start"	• See possible solutions associated with: "Drive doesn't start"
Drive travels uncontrolled in open and close direction	• Residual ripple of power supply / control unit too hight	• Adjust drive voltage to the required value of drive. (values see data sheet of drive)
	• Fault in power supply unit / control unit	• Check output voltage of power supply unit or control unit

Adjust the closing end limit point:

- when the window does not close properly
- when the chain does not slow down on nearing the dosing end limit point
- every time the drive is reinstalled

- Press the open control for a few seconds and wait until the chain extends by about 2 cm.
- Turn the selector switch - at the side of the cable outlet - to **S**. In the case of synchronized drives, perform this operation for all drives.
- Press either control (opening or closing) and then turn the selector switch to the required stroke without powering off the drive. Make sure the drive does not perform any movement. Now power off the drive and wait about two seconds. In the case of synchronized drives, only turn the selector of one of the drives to the required stroke.
- Press either control (opening or closing) and do not power off the drive until the window is fully closed, then power off the drive and wait two seconds.
  Warning: when you power on the drive, be sure the first movement is the closing one.
- Open the window and make sure the drives stroke matches the selected one. If not, check the selector switch position and select the required stroke.
- Close the window and make sure the chain slows down on nearing the end limit point and that the window is fully closed.
- If these conditions are met, the drive is ready for use. Otherwise repeat the end limit point adjustment.

Maintenance and Modification

To ensure continuous function and safety of the drive periodic maintenance by a specialist company is required at least once a year (as mandated by law and recommended by manufacturer). Operational readiness must be checked regularly. Frequent inspection of the system for imbalance and signs of wear or damages of cables and fastening elements must be performed.
During maintenance contaminations must be removed from the drive. Fastenings and clamping screws must be checked for tightness. Test runs during the opening and closing procedure of the devices must be performed.
The drive itself is maintenance-free. Defect devices may only be repaired in our factory. Only spare parts of the manufacturer may be used. When the connection cable of this device is damaged it must be replaced by the manufacturer or his customer service or a similarly qualified person to avoid endangerment.
It is recommended to conclude a maintenance contract. A sample maintenance contract can be downloaded from the homepage of

Firm BTR GmbH
(**www.btr-hamburg.de**).

While cleaning the windows, drives may not have direct contact with water or cleaning agents. Drives must be protected from dirt and dust during the construction phase or renovations.

Maintenance process

1. Open or extend power-operated casement completely.
2. Completely disconnect the system from the mains and secure it against automatic or manual activation.
3. Check windows and fittings for damages.
4. Check all mechanical fastenings (if required, observe information on torques in installation instructions).
5. Check electric drives for damages and contaminations.
6. Check connecting cables (drive cable) for:
   - tightness of the cable screw
   - functionality of the strain relief
   - damages
7. Check the mobility of hinges and fittings and re-adjust or apply lubricant, e.g. silicone spray (observe the instructions of the manufacturer of this window system).
8. Check peripheral seal, remove contaminations or replace.
9. Perform cleaning to maintain functionality (e.g. clean extending elements of the drive, such as chains or spindles by damp wiping them with acid or lye-free agents and drying them and, if required, lubricate them with cleansing oil e.g., Ballistol).
10. Turn on operating voltage.
11. Open and close the power-operated window via the operating voltage (functional test).
12. If available, check and re-adjust protection systems of the safe guard fixture.
13. Check the intactness of the CE label at the power-operated system.
14. Check the intactness of warning instructions and labels at the respective drive.
15. Perform a risk assessment in accordance with Machinery Directive 2006 / 42 / EG, if required, e.g. after modifying the machine.

Demounting

The drives are demounted by reversing the steps, as for the installation. The adjustments are omitted.

1. Completely disconnect the system from the power supply before demounting a drive.
2. After demounting a drive the window must be secured against independent opening.

Dispose of parts according to the locally applicable legal provisions.

Disposal

According to the European Directive 2012/19 / EU on Waste Electrical and Electronic Equipment (WEEE) and its transposition into national law, obsolete electrical appliances must be collected separately and sent for environmentally friendly recycling.

Liability

We reserve the right to change or discontinue products at any time without prior notice. Illustrations are subject to change. Although we take every care to ensure accuracy, we cannot accept liability for the content of this document.

Warranty and Customer Service

In principal apply our:

„General Terms for the Supply of Products and Services of the German Electrical Industry (ZVEI)“.

The warranty corresponds with legal provisions and applies to the country in which the product has been acquired.
The warranty includes material and manufacturing defects incurred during normal use.

The warranty period for delivered material is twelve months.

Warranty and liability claims for personal injuries or material damages are excluded, if caused by one or more of the following:

- No proper incoming goods inspection.
- Improper use of the product.
- Improper installation, commissioning, operation, maintenance or repair of the product.
- Operating the product by defect and improper installed or not functioning safety and protection devices.
- Ignoring instructions and installation requirements in these instructions.
- Unauthorized constructional modifications at the product or accessories.
- Disaster situations due to effects of foreign bodies and Acts of God.
- Wear and tear.

Contact persons for possible warranty claims, for spare parts or accessories are the employees of the responsible branch office or the responsible person at

Firm **BTR GmbH**.

Contact data are available at our homepage

(www.btr-hamburg.de)

Certificate and Declaration of Conformity

We declare under our sole responsibility that the product described under "Data sheet" is in conformity with the following directives:

- 2014/30/EU
  Directive relating to Electro-Magnetic Compatibility
- 2014/35/EU
  Low voltage Directive

We further declare that the drive is an incomplete machine within the meaning of the European Machinery Directive (2006/45/EG).

Technical file and declaration at firm:

BTR GmbH
Gemeindewald 11
D-86672 Thierhaupten

Ramona Meinzer
Managing Director (Chairman)

Note:

The proof of the application of a quality management system is for company:

BTR GmbH

according to the certification basis **DIN EN 9001** as well the "Declaration of Incorporation and Conformity" can be accessed via the QR code or directly on our homepage:

(www.btr-hamburg.de)

This is the original instructions for assembly and commissioning

Important note:
We are aware of our responsibility, which is why we present life-supporting and value-preserving products with greatest possible conscientiousness.
Although we make every effort to ensure that the data and information are as correct and up-to-date as possible, we still cannot guarantee that they are free from mistakes and errors.
All information and data contained in this document are subject to alterations without prior notice.
Distribution and reproduction of this document as well as the use and disclosure of its content is not authorized unless expressly approved.
Offenders will be held liable for the payment of damages. All rights reserved in the case of a patent award or utility model registration.
Basically the General Terms and Conditions of **BTR GmbH** apply to all offers, supplies and services.

The publication of these assembly and commissioning instructions supersedes all previous editions.

♦ **BTR** GmbH ♦
♦ Gemeindewald 11 ♦ D-86672 Thierhaupten ♦
♦ Telefon: +49 8271 811 92-0 ♦ Fax: +49 8271 811 92-55 ♦

www.btr-hamburg.de

9000032681_V0.1_KW18/20